GENERAL PROJECT NOTES

1. THE PROJECT CONTRACTORS AND THEIR REPRESENTATIVES SHALL BE ADVISED THAT ALL CAMPUS AREAS OTHER THAN THE AREAS DESIGNATED FOR REQUIRING WORK SHALL BE "OFF LIMITS".

COORDINATION:
1. VERIFY DIMENSIONS, ELEVATIONS AND EXISTING CONDITIONS AT THE SITE BEFORE COMMENCING WORK AND REPORT DISCREPANCIES TO THE ARCHITECT FOR RESOLUTION PRIOR TO THE START OF WORK.
2. SHOULD THE SPECIFICATIONS FAIL TO PARTICULARLY DESCRIBE THE MATERIAL OR KIND OF PRODUCTS TO BE USED IN ANY PLACE, THEN IT SHALL BE THE DUTY OF THE CONTRACTOR TO SUBMIT A REQUEST FOR INTERPRETATION.
3. ANY WORK INSTALLED IN CONFLICT WITH THE ARCHITECTURAL DRAWINGS SHALL BE CORRECTED BY THE CONTRACTOR AT HIS EXPENSE AND AT NO ADDITIONAL COST TO THE COLLEGE.
4. DO NOT SCALE DRAWINGS. CONTRACTOR SHALL VERIFY ALL DIMENSIONS, ELEVATIONS AND ALL EXISTING CONDITIONS AT THE SITE BEFORE COMMENCING WORK AND REPORT ANY DISCREPANCIES TO THE ARCHITECT PRIOR TO THE START OF WORK.
5. CONTRACTOR'S MATERIALS AND ACTIVITIES SHALL NOT BLOCK ANY EXIT.
6. THE CONTRACT DOCUMENTS ARE COMPLIMENTARY, AND WHAT IS REQUIRED BY ONE SHALL BE AS BINDING AS IF REQUIRED BY ALL; PERFORMANCE BY THE CONTRACTOR(S) SHALL BE REQUIRED TO THE EXTENT CONSISTENT WITH THE CONTRACT DOCUMENTS, REASONABLE INFERABLE FROM THEM AND REASONABLY FORESEEABLE, USING THE MEANS, METHODS AND PROCEDURES NECESSARY TO PRODUCE THE INTENDED RESULTS.
7. THE CONTRACTOR SHALL FIELD VERIFY ALL DIMENSIONS AND CONDITIONS, INCLUDING, BUT NOT LIMITED TO, CRITICAL DIMENSIONS PRIOR TO THE COMMENCEMENT OF THE WORK. SHOULD A DISCREPANCY OCCUR THE CONTRACTOR IS TO NOTIFY THE ARCHITECT PRIOR TO THE COMMENCEMENT OF THE WORK. THE CONTRACTOR(S) SHALL CORRECT ALL DEVIATIONS AND MAKE ANY ADJUSTMENTS TO THE WORK BEFORE HE BEGINS HIS PORTION OF THE WORK.
8. THE CONTRACTOR SHALL VISIT THE SITE AND BE KNOWLEDGEABLE OF CONDITIONS THEREON. HE SHALL INVESTIGATE, VERIFY AND BE FAMILIAR WITH CONDITIONS OF THE PROJECT. HE SHALL NOTIFY THE OWNER AND ARCHITECT OF ANY CONDITIONS REQUIRING MODIFICATION BEFORE PROCEEDING WITH THE WORK.
9. PROVIDE SHOP DRAWINGS TO GUIDE THE FIELD INSTALLATION OF ALL SYSTEMS. THE CONTRACTOR AND HIS SUBCONTRACTORS SHALL NOT USE THESE DIAGRAMMATIC CONTRACT DOCUMENTS AS THEIR SHOP AND COORDINATION DRAWINGS.
10. OWNER WILL DESIGNATE CONTRACTOR'S STAGING LOCATIONS.

DIMENSIONS:
1. CONTRACTOR AND MANUFACTURERS TO COORDINATE ALL DIMENSIONS PRIOR TO PROCUREMENT.
2. THE CONTRACTOR SHALL, TO THE EXTENT PRACTICABLE, VERIFY DIMENSIONS AND FIELD CONDITIONS AT THE SITE. ANY AND ALL CONFLICTS, OMISSIONS AND DISCREPANCIES SHALL BE REPORTED IN WRITING TO THE ARCHITECT FIVE (5) BUSINESS DAYS PRIOR TO THE PROPOSAL SUBMISSION, OTHERWISE THE CONTRACTOR(S) SHALL BEAR ALL COSTS TO COMPLETE THE WORK AS INTENDED ON THE DRAWINGS. THE CONTRACTOR(S) WARRANTS BY RENDERING HIS PROPOSAL THAT THE WORK IS BUILDABLE AS SHOWN.

SYSTEMATIC METHODOLOGIES:
1. ALL DIMENSIONS, NOTES, AND FINISHES SHOWN ON TYPICAL PLANS, SECTIONS OR DETAILS SHALL APPLY TO ALL SIMILAR, SYMMETRICAL OR OPPOSITE HAND PLANS, SECTIONS OR DETAILS, U.O.N.
2. TYPICAL, OR "TYP." SHALL MEAN THAT THE CONDITION IS REPRESENTATIVE FOR SIMILAR CONDITIONS THROUGHOUT, UNLESS REQUIRED OTHERWISE (URO). DETAILS ARE USUALLY KEYED AND NOTED "TYP" ONLY ONE TIME WHEN THEY FIRST OCCUR.
3. LARGE SCALE DRAWINGS TAKE PRECEDENCE OVER SMALL SCALE, DETAILS TAKE PRECEDENCE OVER ALL.

PROTECTION OF EXPOSED TO VIEW WORK:
1. ANY WORK THAT IS NOT FORMED AS REQUIRED OF FOR ANY REASON IS NOT OF ALIGNMENT, NOT LEVEL, OR SHOWS A DEFECTIVE SURFACE, AS DETERMINED BY THE ARCHITECT, SHALL BE REMOVED AND REPLACED FROM THE JOB AND RECONSTRUCTED PER CONTRACT DOCUMENTS AT NO ADDITIONAL COST TO THE OWNER, AND NO INCREASE IN PROJECT SCHEDULE, UNLESS THE ARCHITECT GRANTS PERMISSION TO REPAIR THE DEFECTIVE AREA. PERMISSION TO PATCH ANY SUCH AREA SHALL NOT BE CONSIDERED A WAIVER OF THE ARCHITECT'S RIGHT TO REQUIRE A COMPLETE REMOVAL OF DEFECTIVE WORK IF THE REPAIR DOES NOT IN HIS OPINION, SATISFACTORY RESTORE THE QUALITY OF THE WORK. THE ARCHITECT SHALL BE THE SOLE JUDGE OF ACCEPTABILITY.
2. PROTECTION: MATERIALS EXPOSED IN THE FINISHED WORK FORMS AN IMPORTANT PART OF THE COMPLETED DESIGN. AS SUCH, THE CONTRACTORS' ATTENTION IS DIRECTED TO PROTECTION OF MATERIALS EXPOSED IN THE FINISHED WORK DURING AND AFTER INSTALLATION. DAMAGE TO MATERIALS EXPOSED IN THE FINISHED VIEW SHALL BE DEEMED DEFECTIVE AND SHALL BE CAUSE FOR REJECTION OF THE WORK. DAMAGE SHALL INCLUDE, BUT IS NOT LIMITED TO: PHYSICAL DAMAGE (CHIPPING, CRACKING, SCRATCHING, DENTS, TOOL MARKS, ETC.) OR STAINING DUE TO CONTRACTOR'S OPERATIONS, PHYSICAL DAMAGE OR STAINING DUE TO AIR BORNE CONTAMINANTS (DUST, WIND BORNE DEBRIS, ETC.), THERMAL OR MOISTURE STRESS DAMAGE, AND PHYSICAL DAMAGE SHALL BE REPLACED, AT NO ADDITIONAL COST TO THE OWNER.

DISSIMILAR METALS:
1. ALL DISSIMILAR METALS SHALL BE EFFECTIVELY ISOLATED FROM EACH OTHER TO PREVENT MOLECULAR BREAKDOWN, CORROSION AND GALVANIC ACTION.

HAZARDOUS MATERIALS:
1. SHOULD THE CONTRACTOR ENCOUNTER ANY MATERIALS IDENTIFIED AS HAZARDOUS MATERIALS, HE SHALL IMMEDIATELY REFER TO THE GENERAL CONDITIONS AND NOTIFY OWNER AND THE ARCHITECT.

PROTECTION OF NEW WORK:
1. CONTRACTOR SHALL BE RESPONSIBLE FOR THE PROTECTION OF NEW MATERIALS, WALL FINISHES, ACCESSORIES, ETC. DURING CONSTRUCTION OPERATIONS. ANY DAMAGE TO THESE MATERIALS AND FINISHES SHALL BE REPAIRED AND OR REPLACED AS DIRECTED BY THE OWNER AND THE ARCHITECT.
2. CONTRACTOR SHALL PROVIDE FLOOR/WALL PROTECTION FOR ALL AREAS BEING TRAVELED BY THE CONTRACTOR TO ACCESS WORK SPACE, DURING CONSTRUCTION ACTIVITIES. ANY DAMAGE TO PROTECTION COVERING MATERIALS SHALL BE REPAIRED DURING CONSTRUCTION.
3. CONTRACTOR SHALL DOCUMENT DAMAGE TO WALL AND FLOOR FINISHES, DEVICES, DOORS, ETC. PRIOR TO CONTINUING THE WORK BY PHOTOGRAPHS OR VIDEOS AND WRITTEN DOCUMENTATION ON THE LOCATION OF THE DAMAGE. THE CONTRACTOR SHALL REFER TO THE GENERAL CONDITIONS, NOTIFY AND REVIEW THESE LOCATIONS WITH THE OWNER AND THE ARCHITECT PRIOR TO CONTINUING THE WORK.
4. CONTRACTOR SHALL CLEAN COMPLETED AREAS OF THE WORK THAT BECOME TRACKED WITH CONSTRUCTION MATERIALS AND DUST BEFORE AND AT PROJECT COMPLETION. AREAS UTILIZED FOR CONTRACTOR STAGING AREAS AND BUILDING ACCESS LOCATIONS SHALL BE RESTORED TO THEIR ORIGINAL STATE PRIOR TO THE COMPLETION OF CONSTRUCTION.
5. CONTRACTOR WILL BE ALLOWED TO UTILIZE A DESIGNATED TOILET OR TOILETS AS DETERMINED BY THE OWNER. CONTRACTOR WILL BE RESPONSIBLE FOR MAINTENANCE OF THE TOILETS DURING CONSTRUCTION AND WILL BE RESPONSIBLE FOR CLEANING THE TOILETS DURING CONSTRUCTION AND AT THE COMPLETION OF CONSTRUCTION. ALL PAPER PRODUCTS SHALL BE PROVIDED BY THE CONTRACTOR. THE OWNER RESERVES THE RIGHT TO REQUIRE THE CONTRACTOR TO PROVIDE TEMPORARY TOILETS.

SITE/BUILDING ACCESS:
1. THE OWNER WILL PROVIDE ACCESS ON SITE TO AN AREA TO BE USED FOR CONTRACTOR'S AND STAGING.
2. CONTRACTOR SHALL REGULARLY COORDINATE WITH THE COLLEGE'S PROJECT MANAGER ON DAILY AND WEEKLY PLANS FOR ACCESS TO THE SITE SUCH THAT THE SITE IS SECURED AT THE END OF EACH WORK DAY.

SPEC NOTES

1. Wood Blocking: For blocking not used for attachment of other construction, Utility, Stud, or No. 3 grade lumber of any species may be used provided that it is cut and selected to eliminate defects that will interfere with its attachment and purpose. For blocking and nailers used for attachment of other construction, select and cut lumber to eliminate knots and other defects that will interfere with attachment of other work. All concealed wood blocking shall be fire-retardant treated.
   - A. Set carpentry to required levels and lines, with members plumb, true to line, cut, and fitted. Fit carpentry accurately to other construction. Locate nailers, blocking, and similar supports to comply with requirements for attaching other construction. Provide blocking and framing as indicated and as required to support facing materials, fixtures, specialty items, and trim.
   - B. Install where indicated and where required for attaching other work. Form to shapes indicated and cut as required for true line and level of attached work. Coordinate locations with other work involved.
2. TPO Roofing: ASTM D6878/D6878M, internally fabric- or scrim-reinforced, fully-adhered TPO sheet. All TPO shall be 60 mil, white membrane. Roofing insulation shall be polyisocyanurate board insulation: ASTM C1289, Type II, Class 2, Grade 2, glass-fiber mat facer on both major surfaces. Cover board: ASTM C1177/C1177M, glass-mat, water-resistant gypsum board or ASTM C1278/C1278M fiber-reinforced gypsum board, 5/8-inch thick. Warranty shall be 20 years. Acceptable manufacturers include Carlisle SynTec Inc., GAF Materials Corp., and Versico Inc.
   - A. Provide all accessories and materials necessary for installation of TPO including but not limited to fasteners, sheet flashing, bonding adhesive, and metal termination bars as recommended in writing by TPO manufacturer.
   - B. Roofing Inspection: Contractor and Manufacturer's assigned representative shall inspect the roof deck, documenting deficiencies requiring correction prior to start of roofing as a condition of acceptance.
   - C. Roofing Performance Requirements: Roof membrane shall withstand 2000 hours of exposure when tested according to ASTM G152, ASTM G154, or ASTM G155. Roof membrane shall resist impact damage when tested according to ASTM D3746, ASTM D4272, or the "Resistance to Foot Traffic Test" in FM Approvals 4470. Design roofing system to resist the wind uplift pressures indicated when tested according to FM Approvals 4474, UL 580, or UL 1897.
3. Joint Sealants: For non-traffic surfaces provide Single Component, Nonsag, Neutral-Curing Silicone Sealant; Type S, Grade NS, Class 100/50, Uses include NT (non-traffic), M, G, A and O; non-staining and field-tintable. For traffic surfaces provide Single-Component, Traffic Exposure, Neutral-Curing Silicone Sealant; Type S, Class 100/50, Uses include M, A, and O. For joints including but not limited to expansion joints, control joints, vertical joints on exposed surfaces, and perimeter joints provide Single-Component, Nonsag, Urethane Joint Sealant: ASTM C 920, Type S, Grade NS, Class 25, for Use NT. Acceptable manufacturers for all joint sealants include Pecora Corp., Sika Corp., Dow Chemical Company, and Tremco, Inc.
4. Sheet Metal Flashing and Trim
   - A. Aluminum Sheet: ASTM B209, alloy as standard with manufacturer for finish required, with temper as required to suit forming operations and performance required; with smooth surface.
     1. Aluminum Finish: Mill, U.O.N. in Drawings
     2. Locations: Roof and as indicated.
   - B. Stainless Steel Sheet: ASTM A240/A240M, Type 304, dead soft, fully annealed; with smooth surface.
     1. Stainless Steel Finish: ASTM A480/A480M, No. 4 (polished directional satin).
   - C. Underlayment Materials:
     1. Felt: ASTM D226/D226M, Type II (No. 30), asphalt-saturated organic felt; nonperforated.
     2. Self-Adhering, High-Temperature Sheet Underlayment: Minimum 30 mils thick, consisting of a slip-resistant polyethylene- or polypropylene-film top surface laminated to a layer of butyl- or SBS-modified asphalt adhesive, with release-paper backing; specifically designed to withstand high metal temperatures beneath metal roofing. Provide primer in accordance with underlayment manufacturer's written instructions.
        - a. Basis-of-Design Product: Grace Ice and Water Shield (High Temperature) as manufactured by GCP Applied Technologies.
   - D. Fasteners for Aluminum Sheet: Aluminum or Series 300 stainless steel.
   - E. Fasteners for Stainless Steel Sheet: Series 300 stainless steel.
   - F. Epoxy Seam Sealer: Two-part, noncorrosive, aluminum seam-cementing compound, recommended by aluminum manufacturer for exterior nonmoving joints, including riveted joint

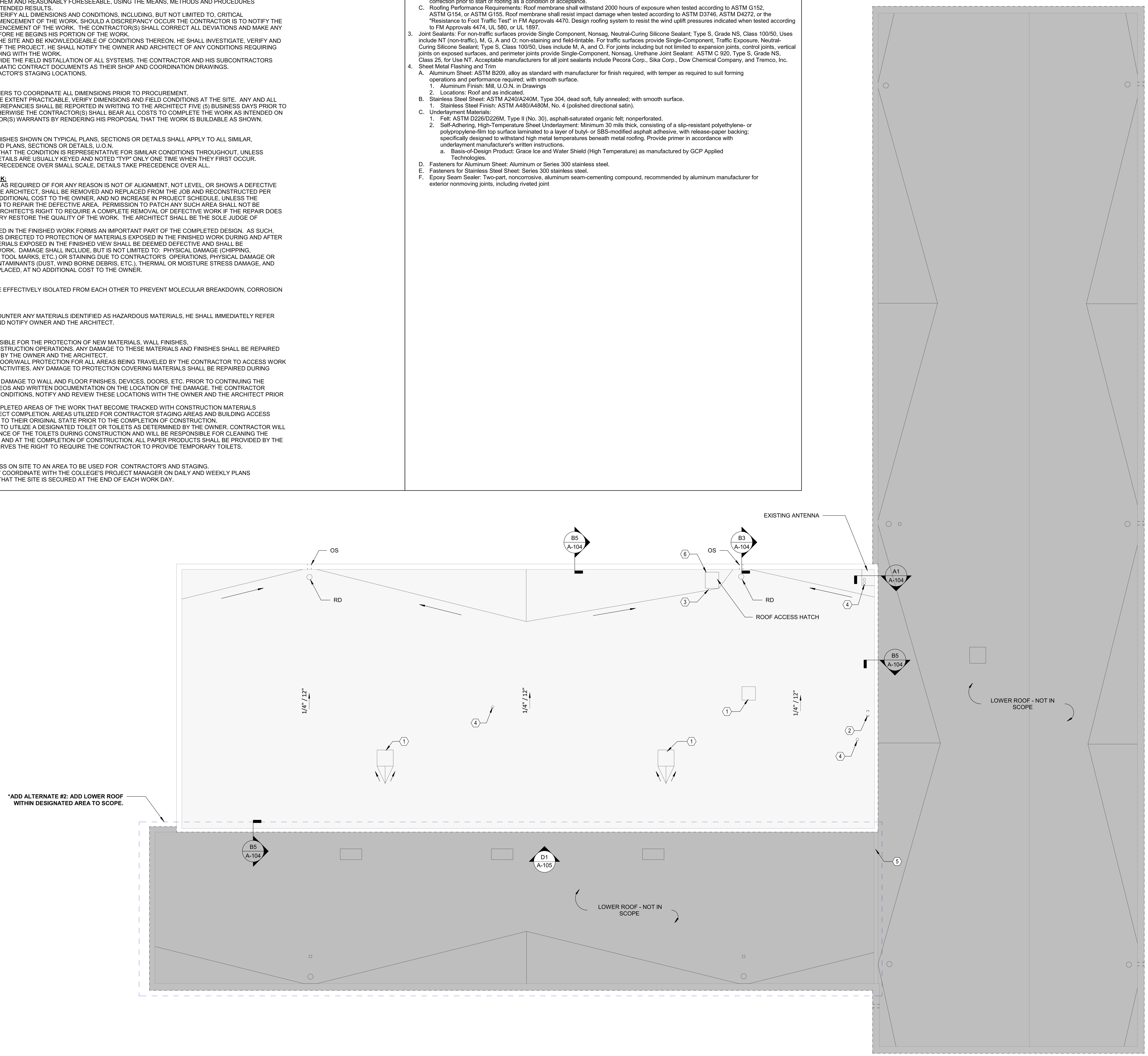

*DEMO EXISTING ROOF MEMBRANE, COVERBOARD, AND INSULATION WITHIN AREA OF SCOPE.

A1 / A-103 **ROOF PLAN** 1/8" = 1'-0"

ROOF PLAN NOTES BY NUMBER

NUMBER	NOTE
1	MECHANICAL / ROOFTOP EQUIPMENT. FIELD VERIFY LOCATION AND DIMENSIONS OF ALL EQUIPMENT PRIOR TO CONSTRUCTION. NEW CRICKETS TO BE BUILT AROUND EQUIPMENT. NEW CURB, 8" MIN. HEIGHT. SEE CURB DETAIL D5/A-104
2	ANTENNA CABLE STAY. FIELD VERIFY LOCATION.
3	NEW CRICKET TO BE BUILT AROUND ROOF HATCH. FIELD VERIFY LOCATION AND DIMENSIONS PRIOR TO CONSTRUCTION.
4	PIPE PENETRATION, FIELD VERIFY LOCATION PRIOR TO CONSTRUCTION. SEE DETAIL D3/A-104
5	EXPANSION JOINT LOCATED HERE.
6	ADD ALTERNATE #1: PROVIDE FALL ARREST SYSTEM FOR ROOF ACCESS HATCH.

AREA MAP - BUILDING LOCATION

ROOF PLAN LEGEND

- NOT IN SCOPE / EXISTING TO REMAIN
- ROOF REPLACEMENT SCOPE
OS - OVERFLOW SCUPPER
RD - ROOF DRAIN

R1 SINGLE PLY TPO

NEW TPO MEMBRANE ROOFING
NEW 1/2" ROOF COVER BOARD
NEW R-30 POLYISOCYANURATE INSULATION
EXISTING METAL ROOF DECK
EXISTING STEEL BEAM OR STEEL JOIST

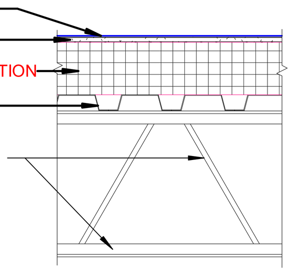

*CONFIRM ORIGINAL ROOF THICKNESS WITH PROPOSED NEW IN ORDER TO ACHIEVE R-30. NOTIFY ARCHITECT IF DISCREPANCIES OCCUR. MINIMUM ROOF SLOPE TO BE 1/4" / 12".

*DEMO EXISTING ROOF MEMBRANE, COVERBOARD, AND INSULATION WITHIN AREA OF SCOPE.

ROOF PLAN SHEET NOTES

1. LOCATIONS AND SIZES OF MECHANICAL EQUIPMENT ARE APPROXIMATE.
2. ALL LOW SLOPED ROOFS TO BE MINIMUM 1/4" PER FOOT. ALL ROOF DRAINS TO BE INSTALLED IN 3'-0" X 3'-0" SUMP TYPICAL UNO.
3. PROVIDE CRICKETS AT ALL CURBS AND EQUIPMENT RAILS SET PERPENDICULAR TO ROOF SLOPE WHICH ARE GREATER THAN 24" WIDE.
4. SLOPE ALL COPINGS BACK TO ROOF UNO.
5. WOOD BLOCKING SHOWN IN ROOF DETAILING SHALL BE FIRE-RETARDANT TREATED. USE FASTENERS COMPATIBLE WITH TREATED WOOD.
6. EXTEND ALL PENETRATIONS, CURBS, AND COMPONENTS A MINIMUM OF 8" ABOVE THE ROOF SURFACE.
7. IF NOT DETAILED, APPLY MOST STRINGENT CONDITION OF NRCA AND SMACNA (CURRENT EDITIONS) STANDARDS FOR ROOF DETAIL CONDITIONS.
8. FIELD VERIFY NUMBER AND LOCATION OF ALL PIPE PENTRATIONS. PIPE PENETRATION LOCATIONS SHOWN ON ROOF PLAN ARE APPROXIMATE.

Blue Ridge Community College

LS3P
2 WEST WASHINGTON STREET STE 600
GREENVILLE, SOUTH CAROLINA 29601
TEL. 864.235.0405 FAX. 864.233.4027
WWW.LS3P.COM

LS3P ASSOCIATES LTD. Registered Architectural Corporation 50417 North Carolina GREENVILLE, SC

JOHN R. EDWARDS REGISTERED ARCHITECT 8894 NORTH CAROLINA GREENVILLE, SC 4-16-2021

COPYRIGHT 2021 ALL RIGHTS RESERVED. PRINTED OR ELECTRONIC DRAWINGS AND DOCUMENTATION MAY NOT BE REPRODUCED IN ANY FORM WITHOUT WRITTEN PERMISSION FROM LS3P ASSOCIATES LTD.

Henderson Building - Roof Replacement

180 W Campus Dr.
Flat Rock, NC 28731

LS3P PROJECT: 3202-211570

Δ	DATE	DESCRIPTION

SHEET NAME: ROOF PLAN

ORIG SUBMISSION: 04/16/2021

SHEET: A-103

BID SET

THE LINE SHOWN ABOVE IS EXACTLY ONE INCH LONG AT THIS SHEETS ORIGINAL PAGE SIZE

4/16/2021 3:47:17 PM

THE LINE SHOWN ABOVE IS EXACTLY ONE INCH ON ORIGINAL PAPER SIZE

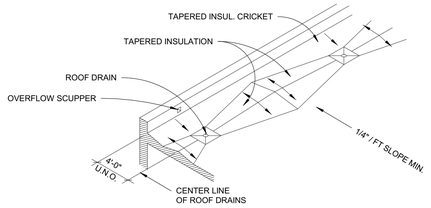

E1 / A-104	ROOF SLOPING DIAGRAM	12" = 1'-0"

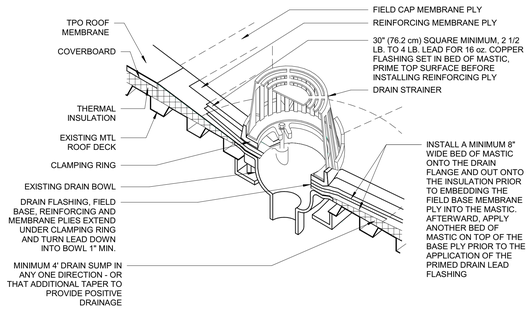

D1 / A-104	ROOF DRAIN DETAIL, TYP.	1 1/2" = 1'-0"

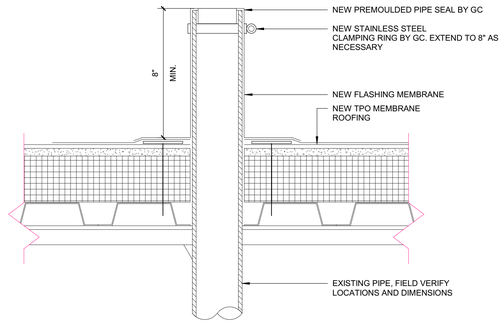

D3 / A-104	PIPE PENETRATON DETAIL, TYP.	3" = 1'-0"

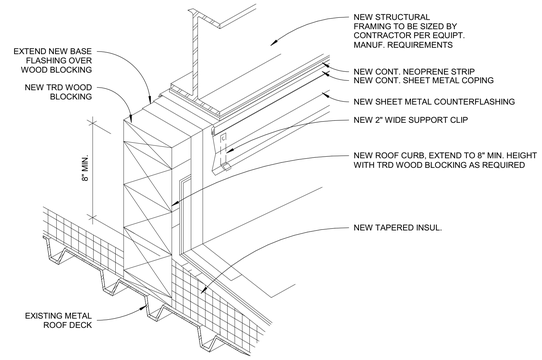

D5 / A-104	CURB DETAIL, TYP.	12" = 1'-0"

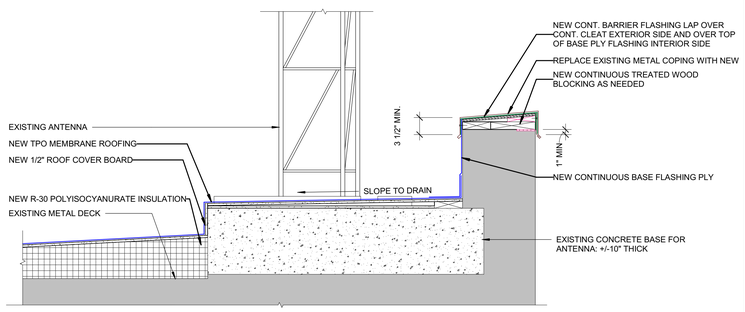

*PHOTO OF EXISTING CONDITION - FOR REFERENCE ONLY

A1 / A-104	ROOF DETAILS - ANTENNA BASE	1" = 1'-0"

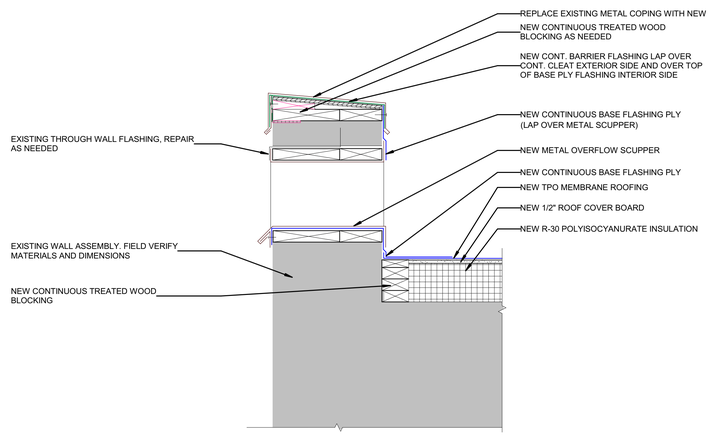

B3 / A-104	OVERFLOW SCUPPER, TYP. - COPING & BASE FLASHING	1 1/2" = 1'-0"

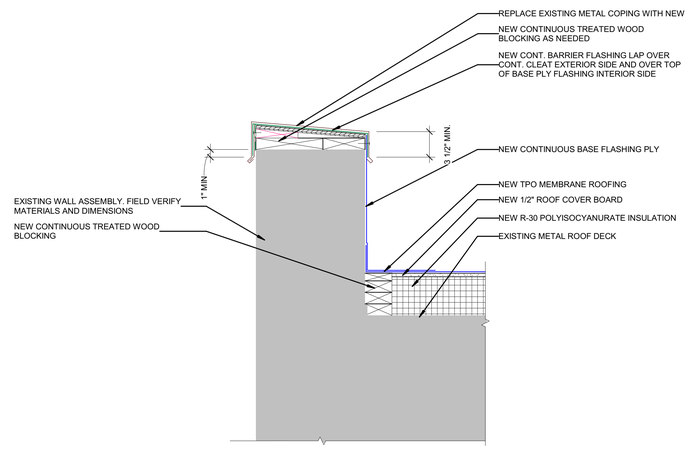

B5 / A-104	PARAPET, TYP. - COPING & BASE FLASHING	1 1/2" = 1'-0"

4/16/2021 3:47:19 PM

1 2 3 4 5 6

BlueRidge COMMUNITY COLLEGE

Blue Ridge Community College

LS3P

2 WEST WASHINGTON STREET STE 600
GREENVILLE, SOUTH CAROLINA 29601
TEL. 864.235.0405 FAX. 864.233.4027
WWW.LS3P.COM

LS3P ASSOCIATES LTD. Registered Architectural Company 50417 North Carolina GREENVILLE, SC

JOHN R. EDWARDS REGISTERED ARCHITECT 8894 NORTH CAROLINA

4.16.2021

COPYRIGHT 2021 ALL RIGHTS RESERVED. PRINTED OR ELECTRONIC DRAWINGS AND DOCUMENTATION MAY NOT BE REPRODUCED IN ANY FORM WITHOUT WRITTEN PERMISSION FROM LS3P ASSOCIATES LTD.

Henderson Building - Roof Replacement

180 W Campus Dr.
Flat Rock, NC 28731

LS3P PROJECT: 3202-211570

Δ	DATE	DESCRIPTION

SHEET NAME:
ROOF DETAILS

ORIG SUBMISSION: 04/16/21

SHEET:
A-104

BID SET

THE LINE SHOWN ABOVE IS EXACTLY ONE INCH LONG ON ANSI SHEETS. OCCASIONAL PLOT SIZE

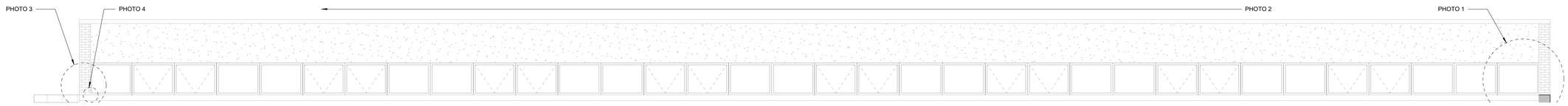

D1 / A-105 **CLERESTORY WINDOWS - ELEVATION** — 1/4" = 1'-0"

B3 / A-105 **PHOTO 2** — 12" = 1'-0"

B5 / A-105 **PHOTO 1** — 12" = 1'-0"

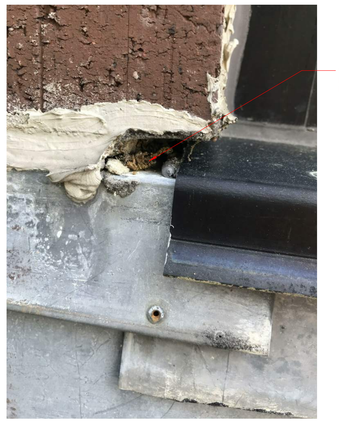

A3 / A-105 **PHOTO 4** — 12" = 1'-0"

A5 / A-105 **PHOTO 3** — 12" = 1'-0"

4/16/2021 3:47:22 PM

Blue Ridge Community College

LS3P
2 WEST WASHINGTON STREET STE 600
GREENVILLE, SOUTH CAROLINA 29601
TEL. 864.235.0405 FAX. 864.233.4027
WWW.LS3P.COM

LS3P ASSOCIATES LTD. Registered Architecture Company 50417 North Carolina GREENVILLE, SC

JOHN R. EDWARDS REGISTERED ARCHITECT 8894 NORTH CAROLINA

4.16.2021

COPYRIGHT 2021 ALL RIGHTS RESERVED. PRINTED OR ELECTRONIC DRAWINGS AND DOCUMENTATION MAY NOT BE REPRODUCED IN ANY FORM WITHOUT WRITTEN PERMISSION FROM LS3P ASSOCIATES LTD.

Henderson Building - Roof Replacement

180 W Campus Dr.
Flat Rock, NC 28731

LS3P PROJECT: 3202-211570

Δ	DATE	DESCRIPTION

SHEET NAME:
WINDOW ELEVATIONS AND EXISTING PHOTOS

ORIG SUBMISSION: 04/16/21

SHEET: **A-105**

BID SET